PNEUMATIC ACTUATORS

Stainless steel double acting actuator, 0-90°

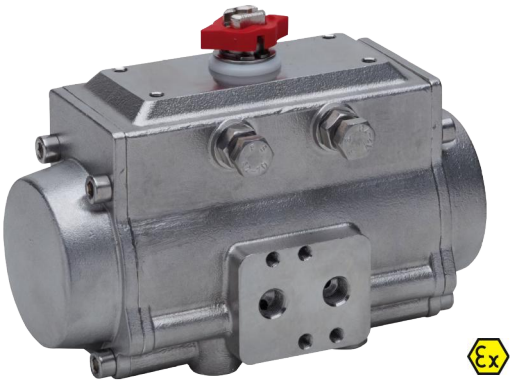

84DA

Actuator for the automation of ball valves and butterfly valves.
Mounting pattern according to ISO5211.
Double acting: Air open the valve. Air close the valve.
Solenoid and switchbox connection according to Namur norm.
The actuator is certified SIL3.

Technical Specification

Air supply pressure:	2,5 - 8 bar
Temperature range:	-20...+85°C
Stroke adjustment:	Open and closed position ±5°
Body:	Stainless steel A351-CF8M
End caps:	Stainless steel A351-CF8M
Pinion:	Stainless steel AISI 316
Screws and nuts:	Stainless steel A2
Pistons:	Aluminium
Seals:	NBR and POM
ATEX:	II 2 G/D c T6

Operating Principle

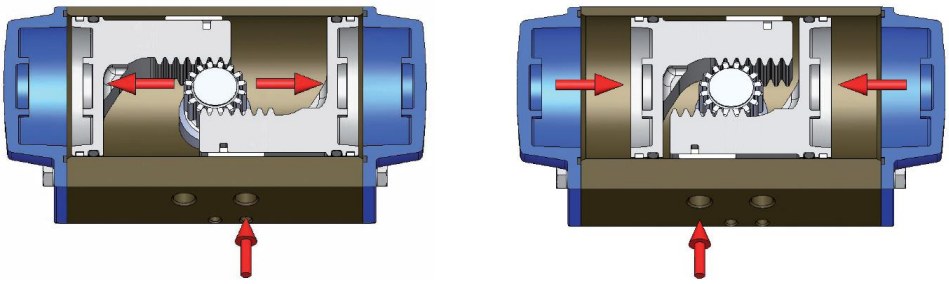

Torque (Nm)

Supply pressue (bar)	2,5	3,0	4,0	5,0	5,5	6,0	7,0	8,0
Type	9,0	11,0	14,5	18,5	20,0	22,0	26,0	30,0
84DA052	15,5	19,0	26,0	33,0	36,0	39,5	46,5	53,5
84DA063	29,0	35,0	47,5	60,0	66,0	72,0	84,5	97,0
84DA075	41,5	50,5	68,5	87,0	96,0	105,0	123,0	141,0
84DA085	66,0	80,0	108,0	136,0	150,0	164,5	193,0	221,0
84DA100								

PNEUMATIC ACTUATORS

84DA/SR 052 - 100, 0-90°

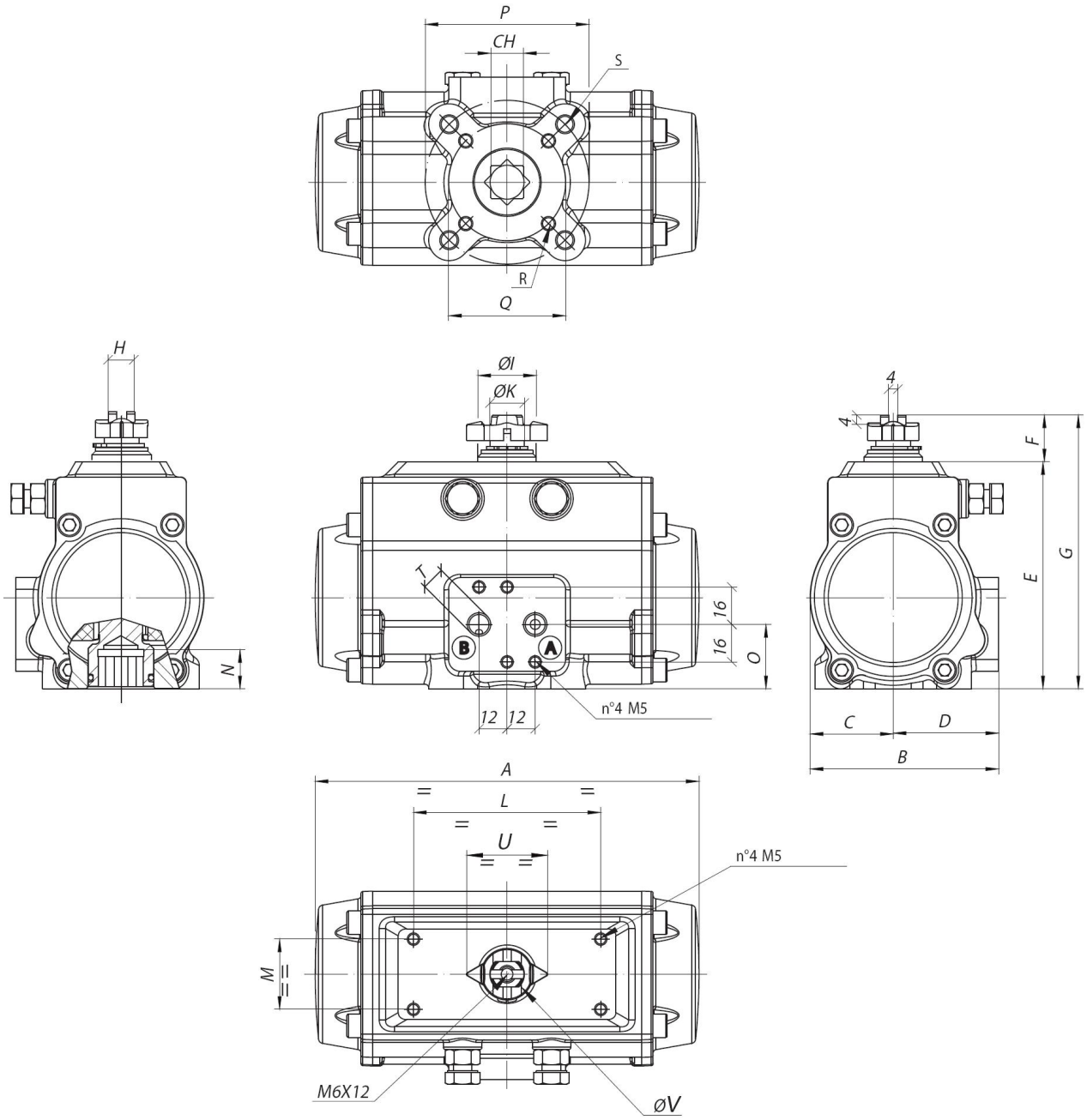

Dimensions

Type	ISO5211	CH	A	B	C	D	E	F	G	H	ØI	ØK	L	M	N	O	P	Q	R	S	T	U	ØV
84DA/SR052	F03/05	11	141	71	30	41	86	20	106	10	21	12	80	30	12	27	50	36	M5x7,5	M6x9	1/8"	35	22
84DA/SR063	F05/07	14	164	81	36	45	97	20	117	11	25	15	80	30	16	28	70	50	M6x8	M8x12	1/8"	35	22
84DA/SR075	F05/07	17	210	95	42	53	115	20	135	13	29	19	80	30	19	35	70	50	M6x8	M8x12	1/8"	42	29
84DA/SR085	F05/07	17	241	106	48	59	129	20	149	15	35	22	80	30	19	42	70	50	M6x8	M8x12	1/8"	42	29
84DA/SR100	F07/10	17	275	123	55	68	144	20	164	15	35	22	80	30	21	53	102	70	M8x9	M10x14	1/4"	42	29

PNEUMATIC ACTUATORS

84DA/SR 052 - 100
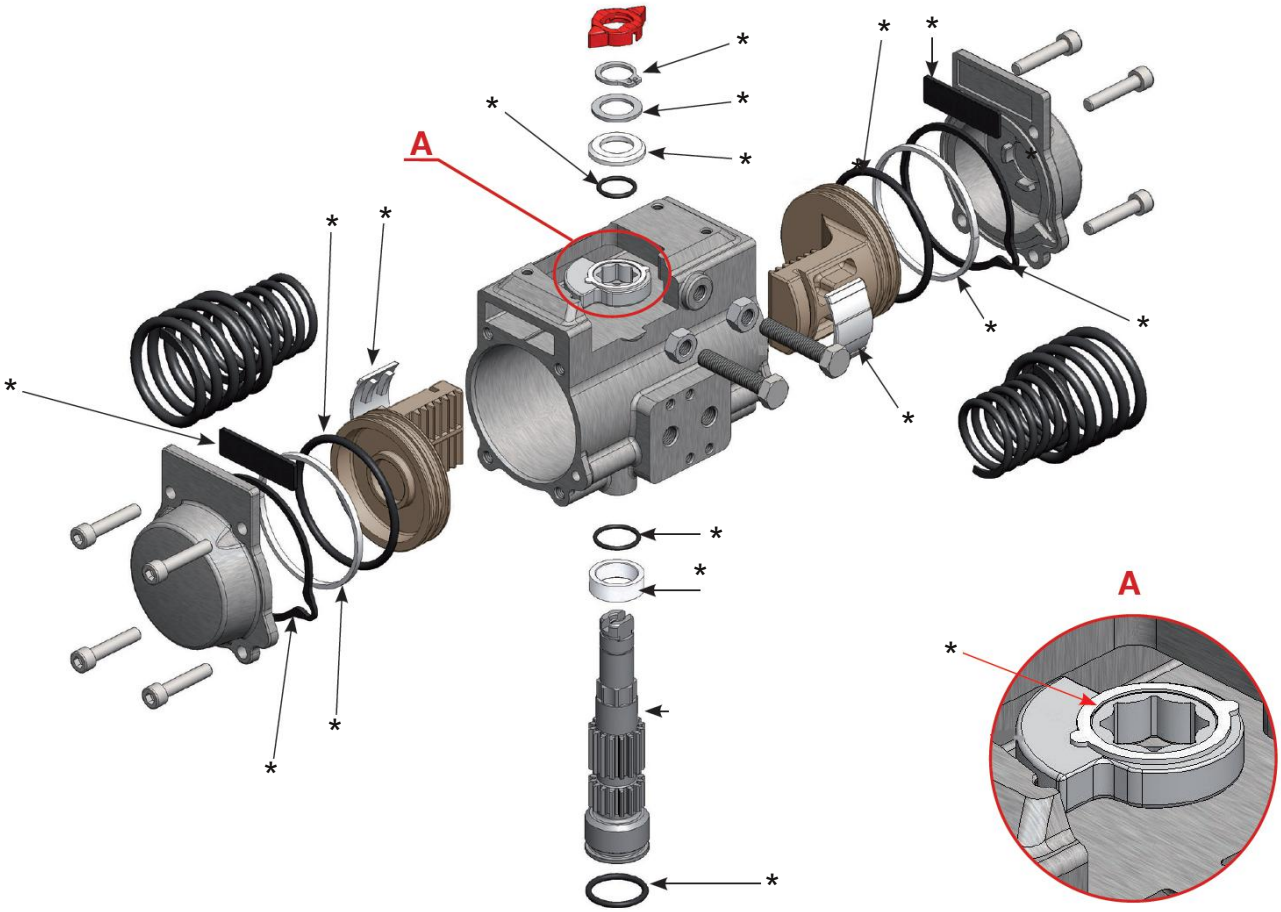
Spare part kit 84DA/SR 052 - 100